33 J-2S/RS-2200 Aerospike Supporting Technologies

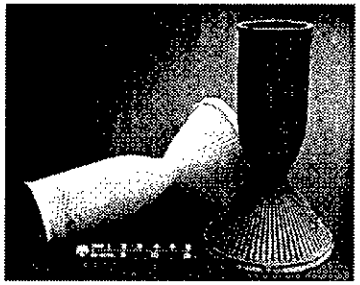

Modular Thrust Cells

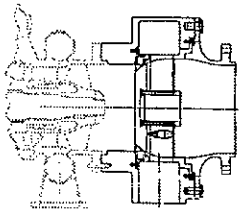

Jet Boost Pumps

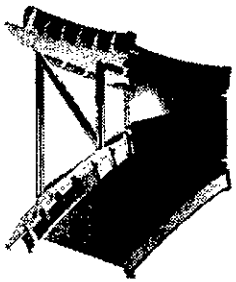

Aerospike Nozzle

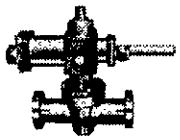

Sector Ball Valves/EMA's

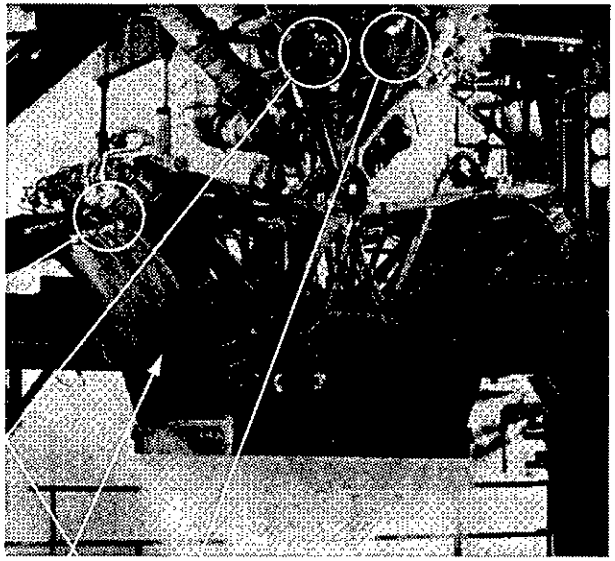

J-2S Aerospike

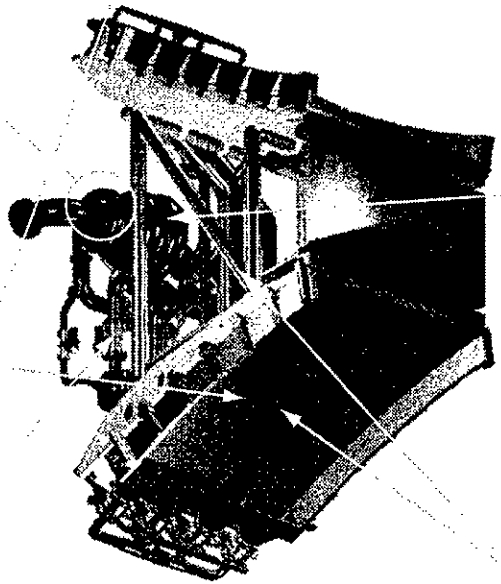

RS-2200

Additional RS-2200 Technologies:

- *Multi Thrust Cell Technology*
- *Composite Components*
- *Health Management*
- *Laser Ignition*

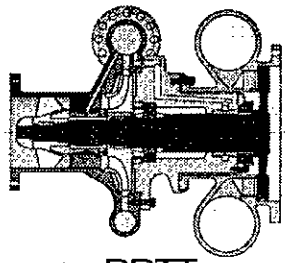

RRTT

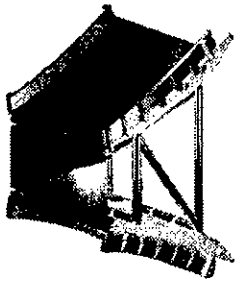

Composite Nozzle/Thrust Structure

X 33 Lockheed Linear Aerospike SR-71 Experiment

- Addresses Vehicle Aerodynamic/Aerospike Engine Interaction Issues During Flight

- 10% Scale Half-span Model Of Integrated Lifting Body/Aerospike Engine Mounted On Sr-71

- Two Month Flight Test (Apr-May 96)
  - 13 Data Flights (26 Test Points)
  - Follows RLV Trajectory Between Fight Mach Numbers Of 0.6 Through Mach 3.2

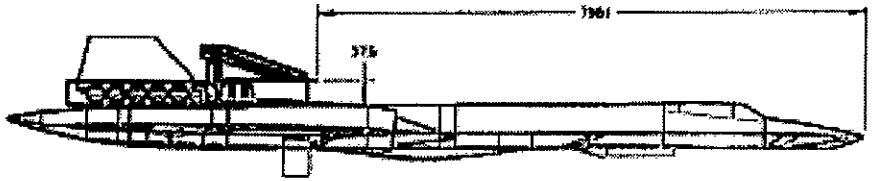

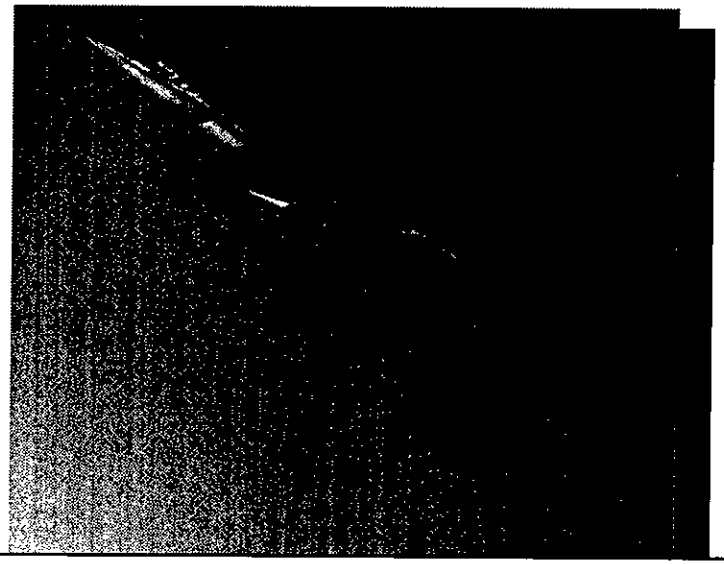

Objectives:

- Establish Database For Validating Analysis Methods And Tools (CFD) For Use On Full Scale System Design
  -- Provides Hot-fire Data For Use In Combination With X-33 Task 4 Cold-flow Wind Tunnel Testing And CFD

- Demonstrate Operation Of Integrated Lifting Body/ Aerospike Engine During Flight At True Mach And Altitude

- Measure Installed Thrust Along RLV Flight Trajectory

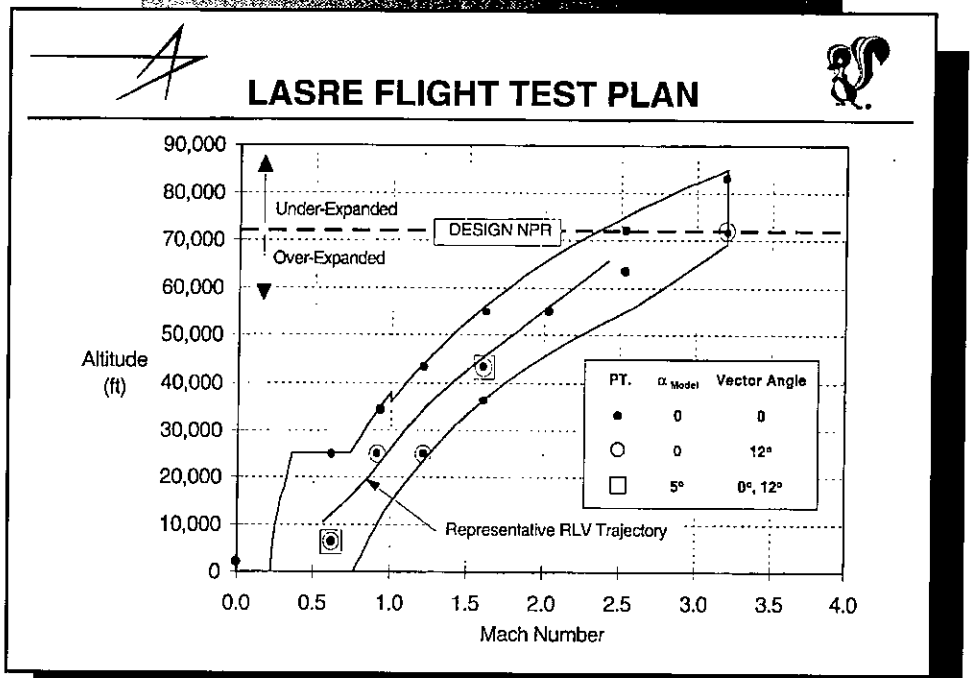

X-33 Integrated Propulsion Technology Demonstrator (IPTD)

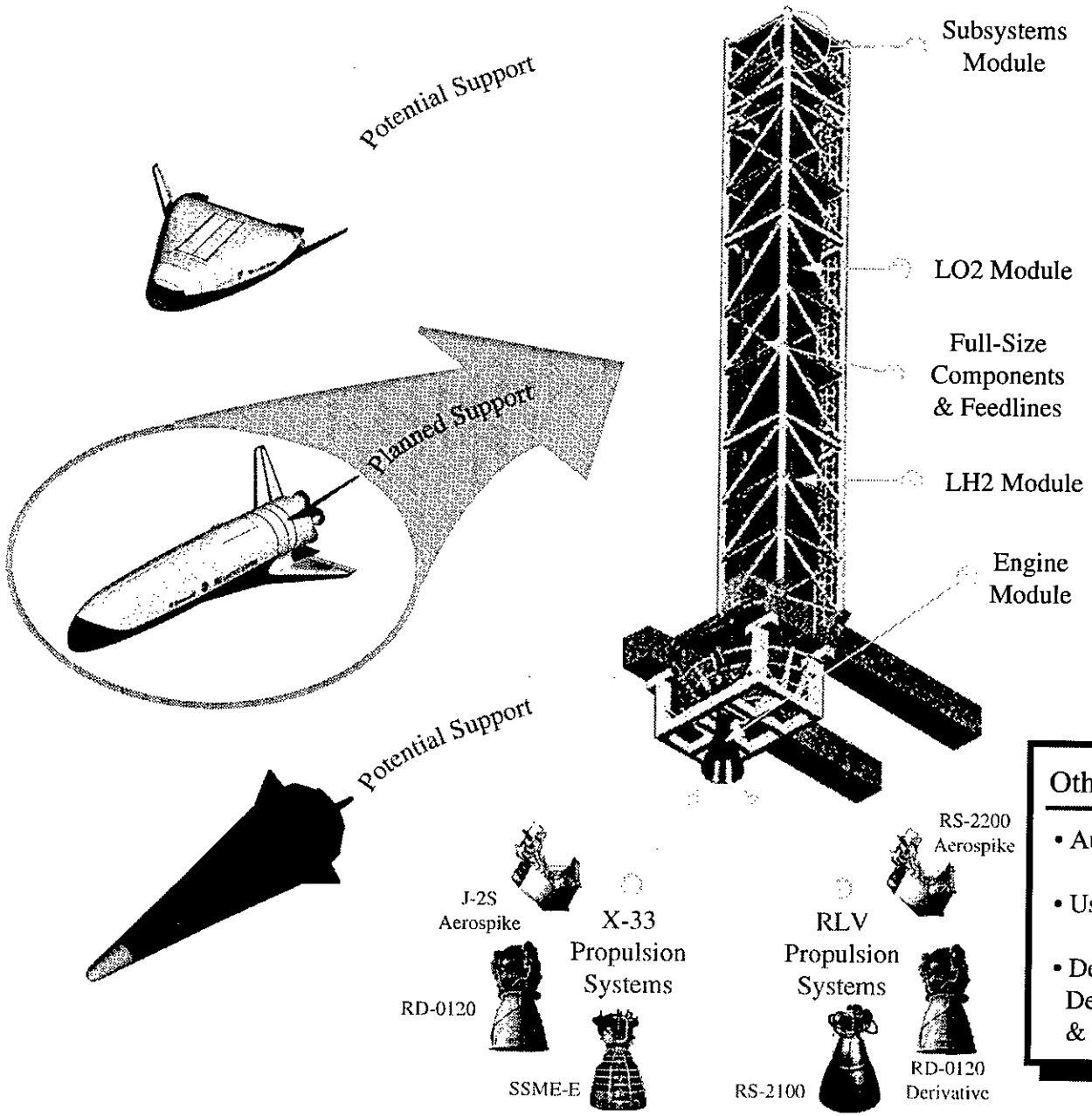

IPTD Purpose & Objectives:

- Evaluate Main Propulsion System (MPS) Concepts
- Evaluate Component Integration & Functional Performance At Operational Scales & Environments
- Provide A Platform For Operational Propulsion System Tests That Would Prevent Potential Flight Vehicle Damage/Loss In The Event Of MPS Problems Encountered During Development
- Reduce Risk of Planned Flight Tests
- Evaluate Low Cost RLV Operational Concepts/Procedures

Other IPTD Technologies:

- Automated Fault-Tolerant Checkout/Control
- Use/Evaluation Of VHM Smart Sensors
- Demonstration Of Operationally Efficient Designs, Manpower Support Requirements & MPS Maintenance Procedures

Propulsion Technology Schedule & Products

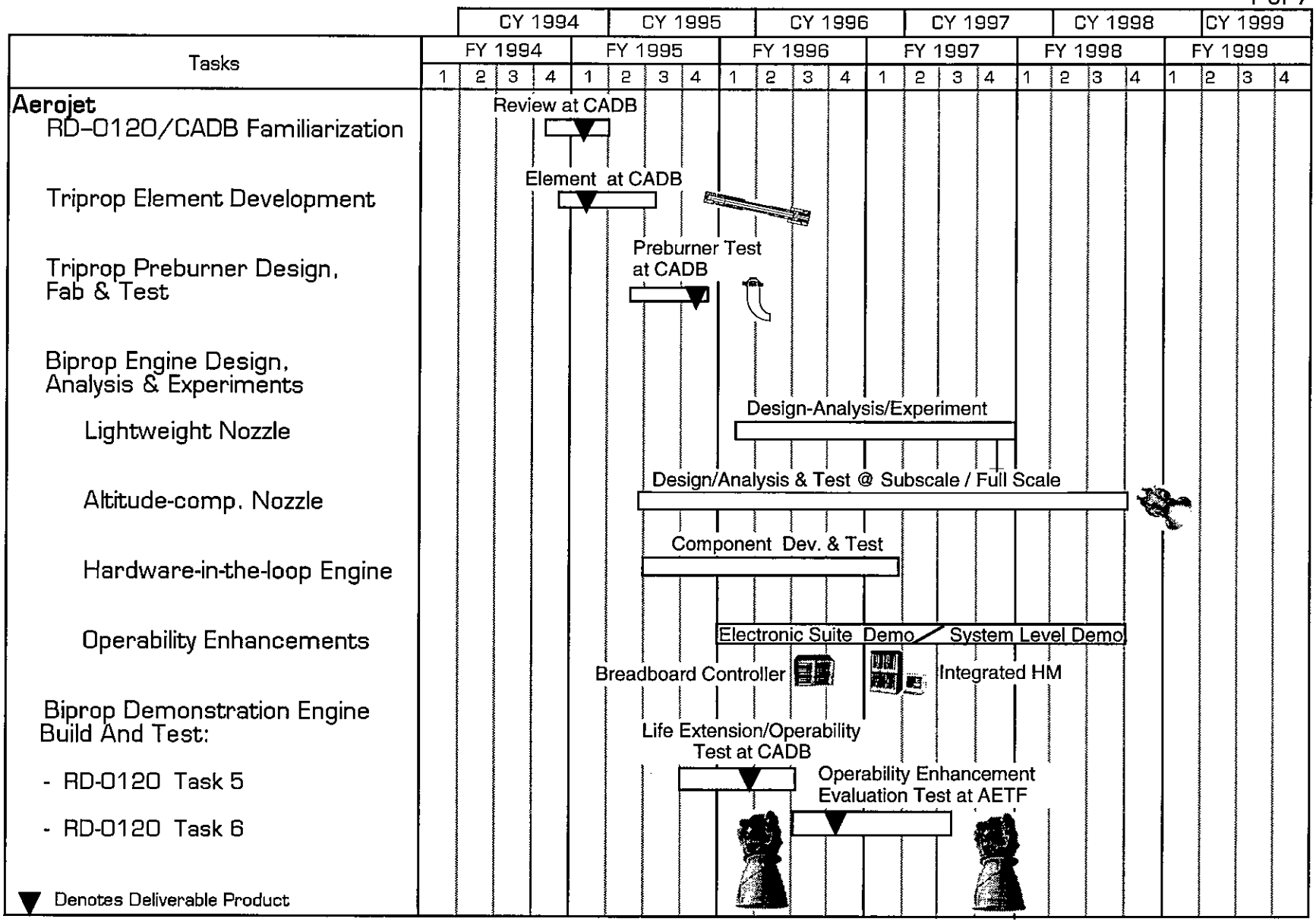

Propulsion Technology Schedule & Products

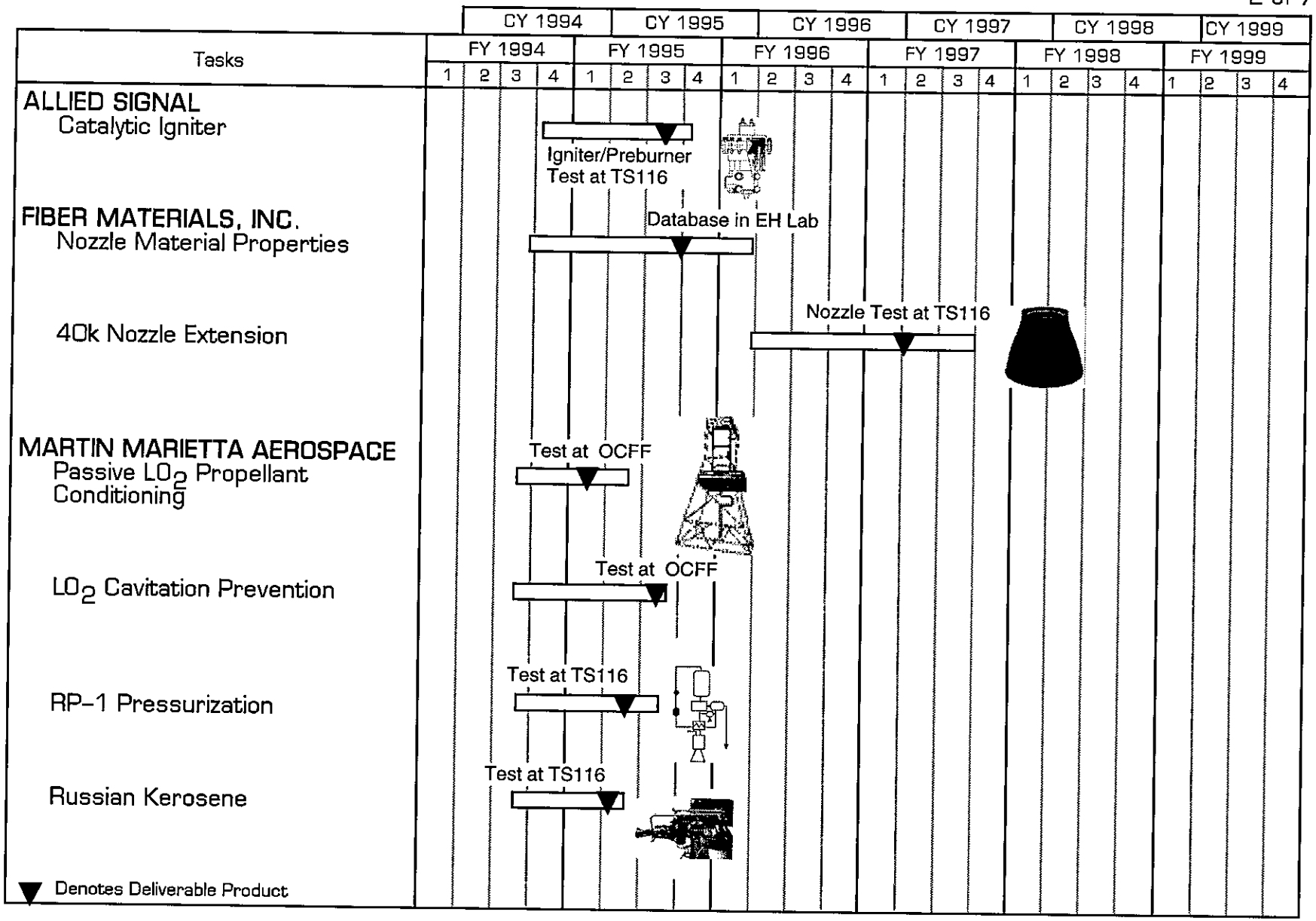

Propulsion Technology Schedule & Products

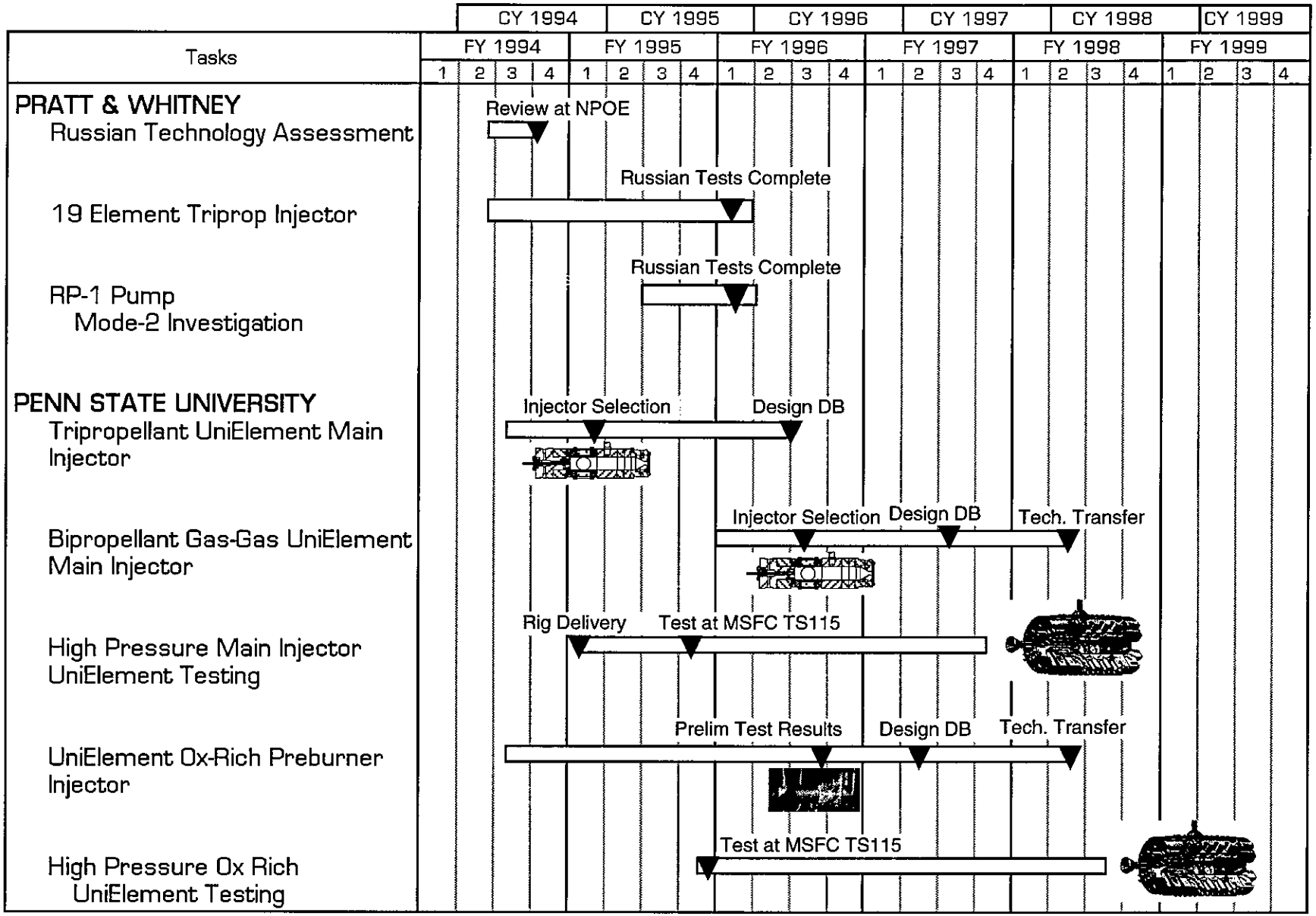

▼ Denotes Deliverable Product

Propulsion Technology Schedule & Products

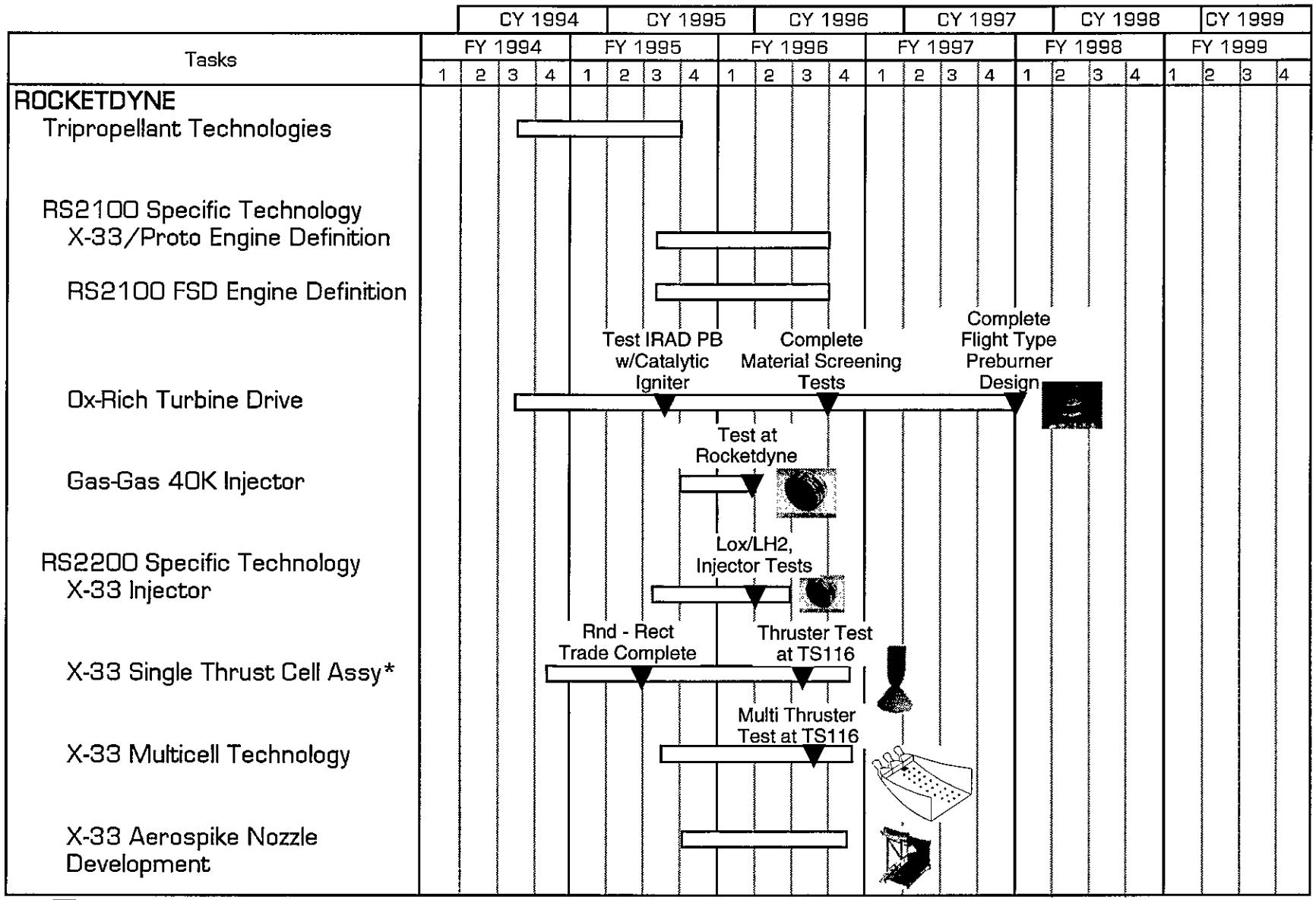

▼ Denotes Deliverable Product

* Area 4 Task thru LMSW

Propulsion Technology Schedule & Products

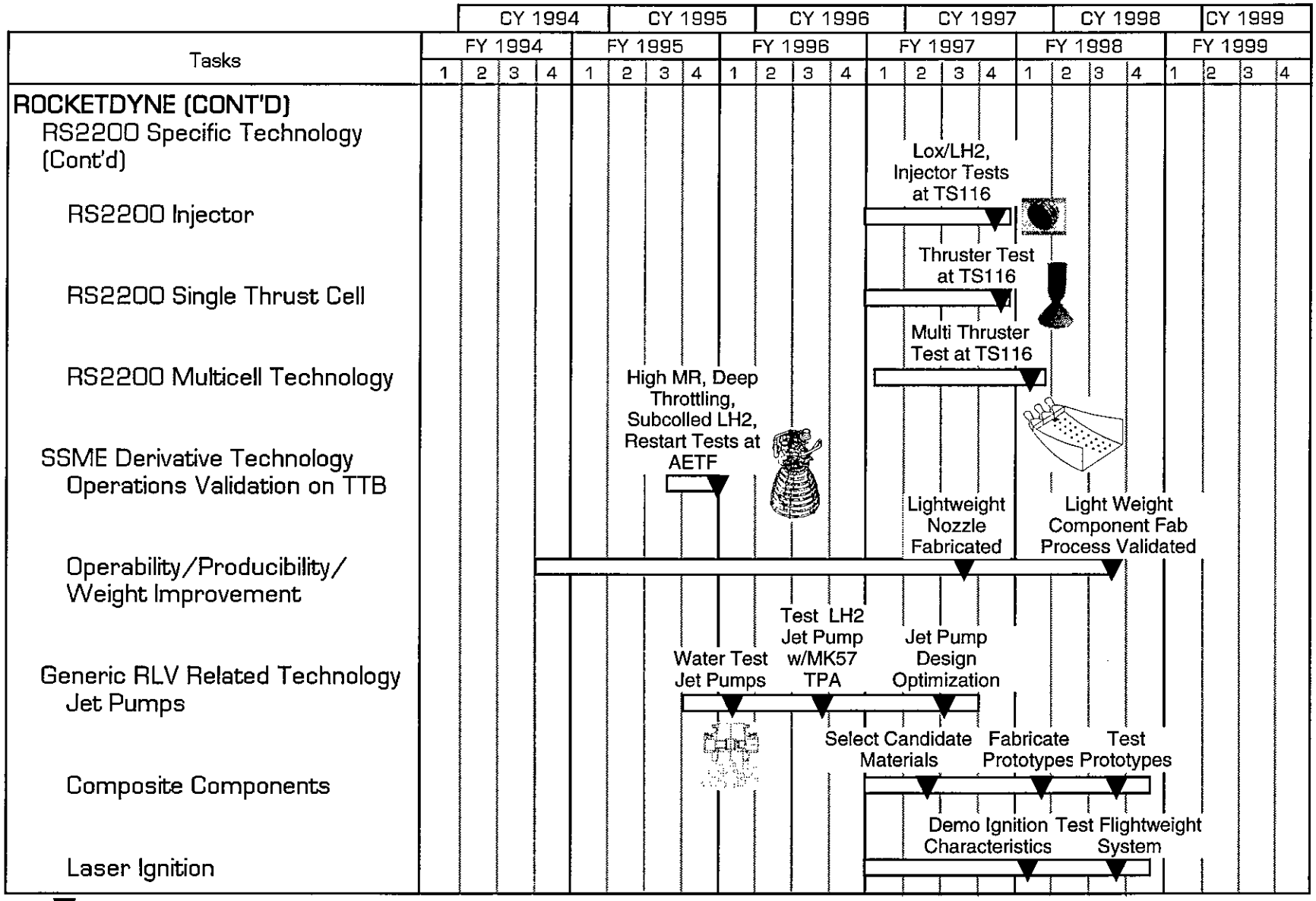

▼ Denotes Deliverable Product

Propulsion Technology Schedule & Products

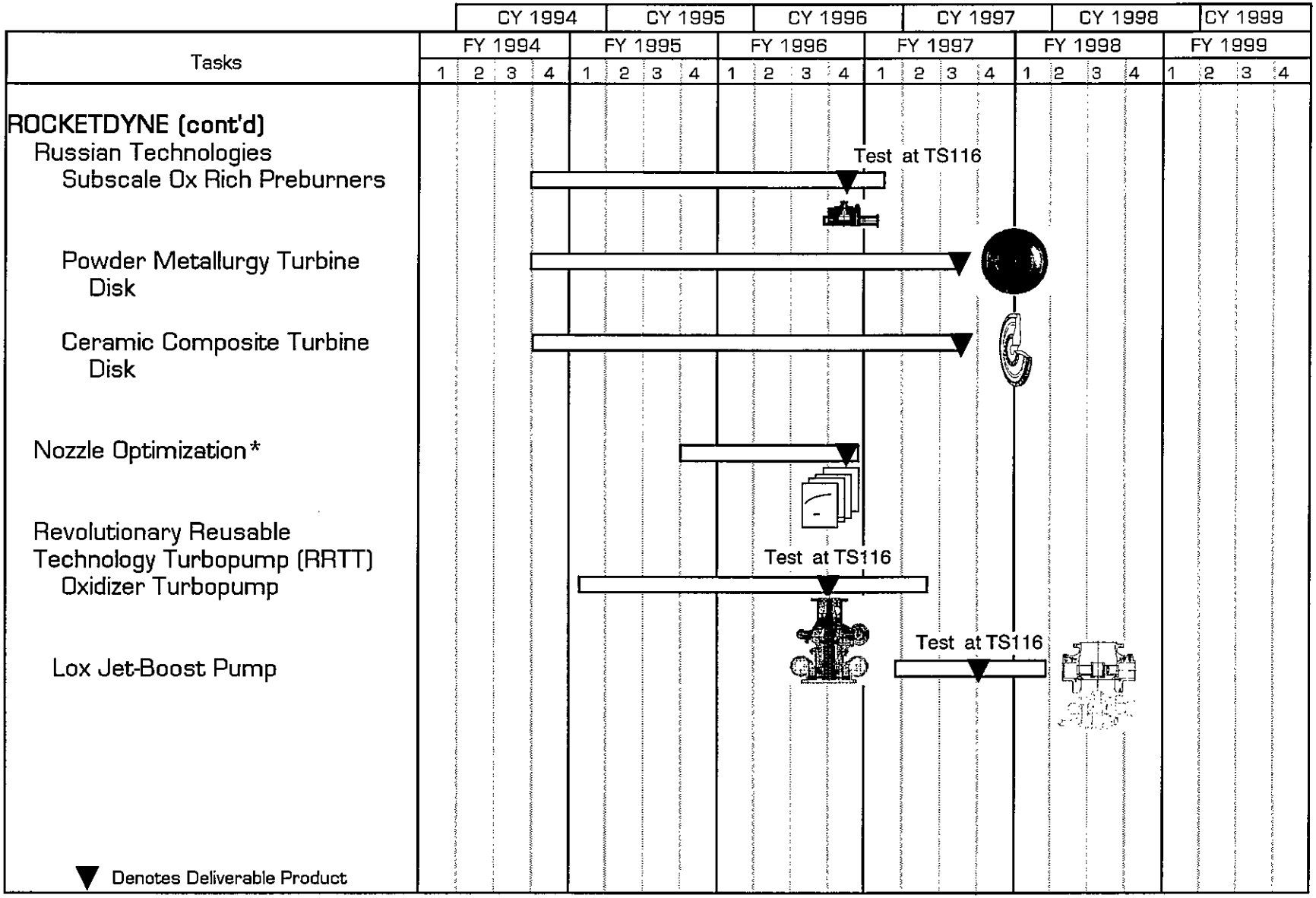

*Area 4 Task thru MDA

Propulsion Technology Schedule & Products

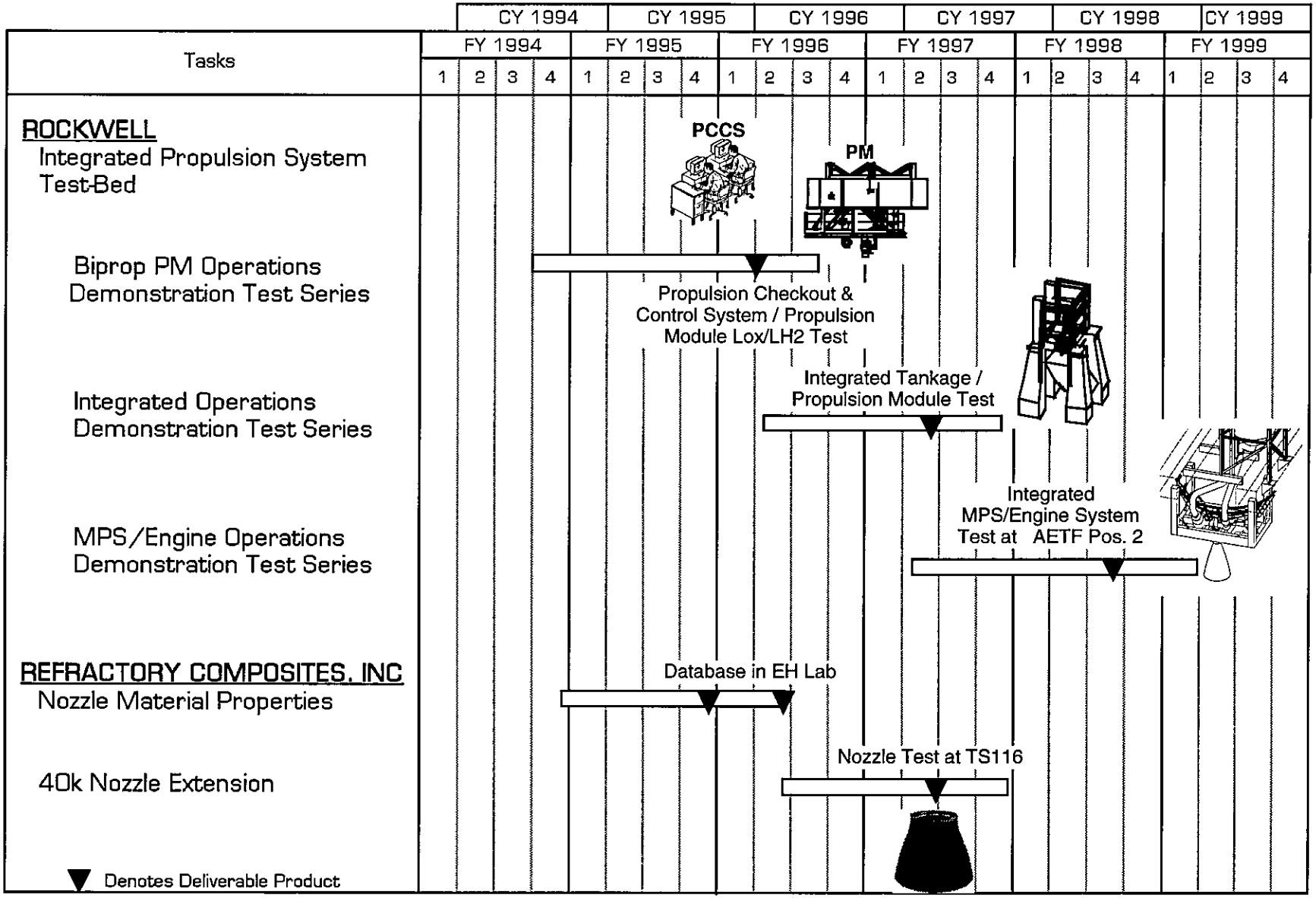

X-33 Long Term/High Payoff(LT/HP) Technologies

RLV Enhancement At All Phases Of Design, Development And Operational Evolution

LT/HP Technology Program

MPS Subsystems & Components
- Turbomachinery
- Combustion Devices & Nozzles
- Lines & Ducts
- Valves & Actuators
- Light-Wieght MPS Technologies

Analysis & Design Tools
- Fatigue & Fracture Mechanics
- CFD & Model Based Design Codes
- Design Tools forPerformance Enhancement

MPS Instrumetation, Control & Health Management
- Robust Instrumentation
- Modular Controller Software
- Components w/ BIT
- MPS Diagnostic, Assessment & Reporting System
- Realt-Time Condition Monitoring
- Optical Properties Anomaly Detection

Advanced Mat'l, Munuf. & Process Development
- Thermal Coatings
- Oxigen Rich Technologies
- Alternate Materials Technology
- NDE & Repair of Composites
- Material Joining & Process Control
- Rapid Prototype Process Integration

System Operations Technologies
- Non-Linear Spectral Analysis
- Expert System for RLV Test & Op's
- RLV Systems Operability Enhancement Tecnology

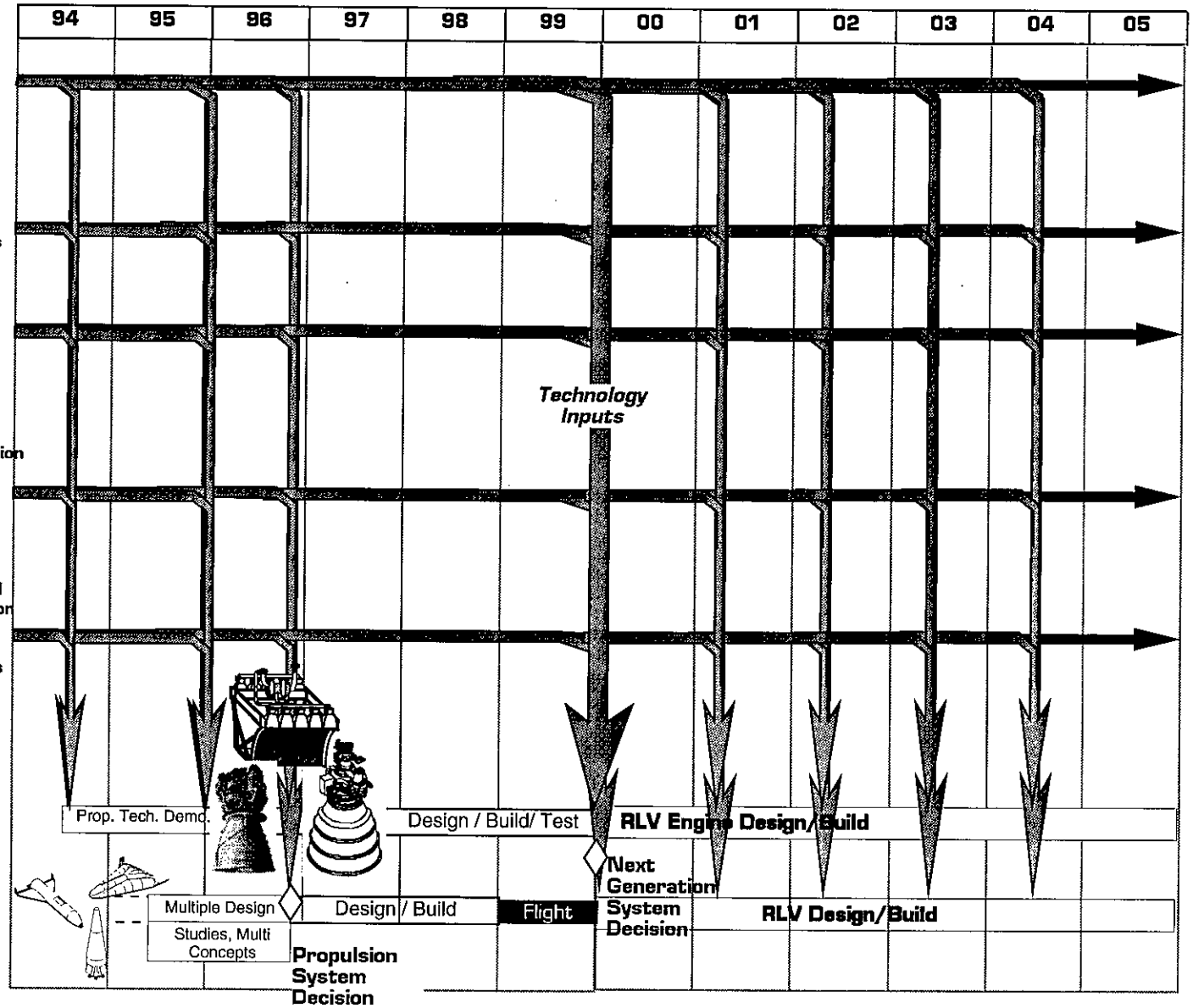

Pototype Engine Development

Flight Demonstration Program

X-33 Advanced Technology Demonstrator (ATD)